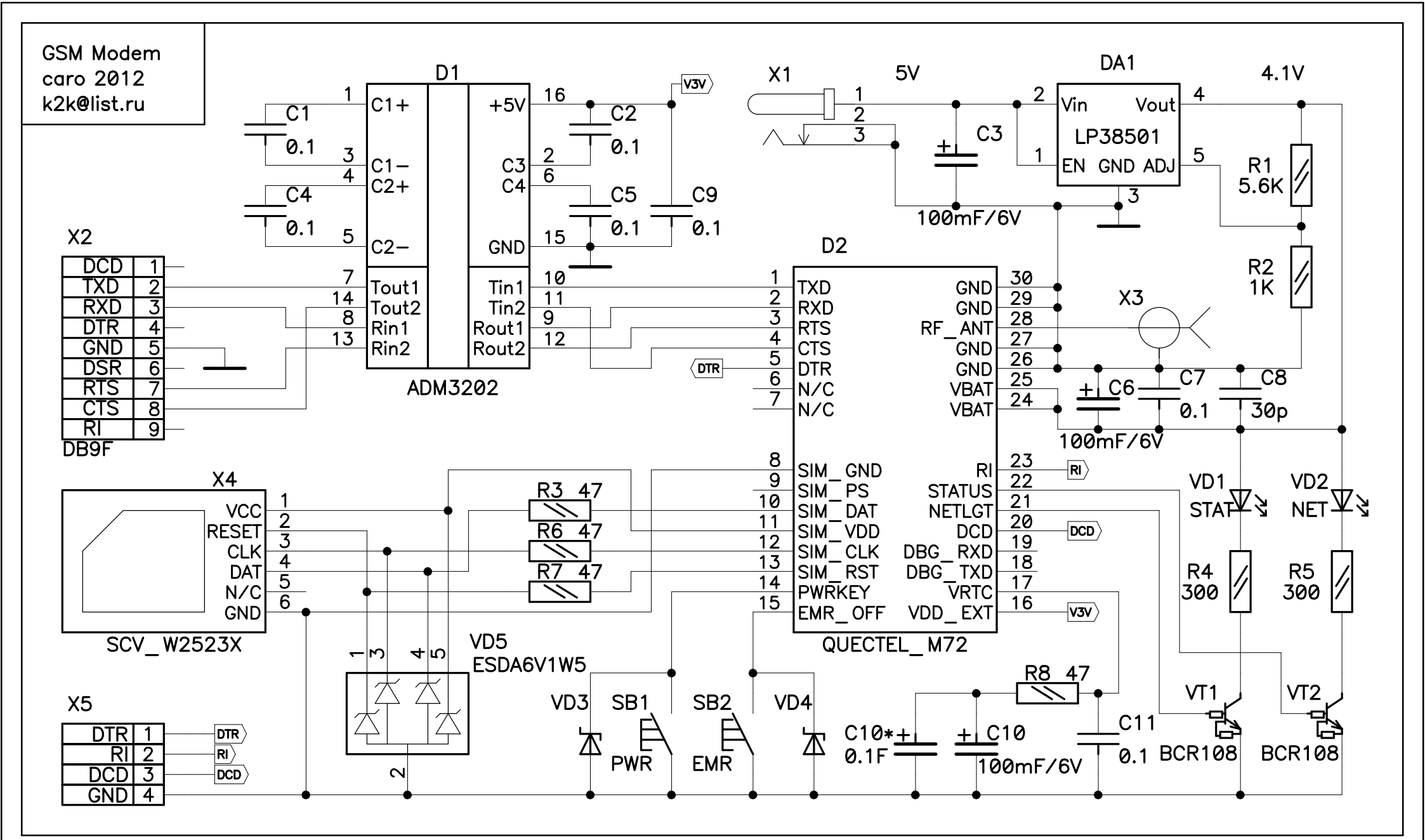
GSM Modem
caro 2012
k2k@list.ru
D1
ADM3202
C1+
C1−
C2+
C2−
+5V
C3
C4
GND
Tout1
Tout2
Rin1
Rin2
Tin1
Tin2
Rout1
Rout2
C1 0.1
C2 0.1
C3
C4 0.1
C5 0.1
C9 0.1
V3V
X1
5V
C3
100mF/6V
DA1
Vin
Vout
LP38501
EN GND ADJ
4.1V
R1 5.6K
R2 1K
X2
DCD
TXD
RXD
DTR
GND
DSR
RTS
CTS
RI
DB9F
D2
TXD
RXD
RTS
CTS
DTR
N/C
N/C
SIM_GND
SIM_PS
SIM_DAT
SIM_VDD
SIM_CLK
SIM_RST
PWRKEY
EMR_OFF
GND
GND
RF_ANT
GND
GND
VBAT
VBAT
RI
STATUS
NETLGT
DCD
DBG_RXD
DBG_TXD
VRTC
VDD_EXT
QUECTEL_M72
X3
C6
C7 0.1
C8 30p
100mF/6V
VD1 STAT
VD2 NET
R4 300
R5 300
X4
VCC
RESET
CLK
DAT
N/C
GND
SCV_W2523X
R3 47
R6 47
R7 47
VD5
ESDA6V1W5
X5
DTR
RI
DCD
GND
VD3
SB1
PWR
SB2
EMR
VD4
C10* 0.1F
C10 100mF/6V
R8 47
C11 0.1
VT1 BCR108
VT2 BCR108